FILTER FABRIC INLET PROTECTION

MATERIALS:
Use filter fabric that conforms to SCDOT standard specifications for highway construction (latest edition). Refer to the silt fence geotextile fabrics Approval Sheet #34.

Use steel posts that meet the following minimum physical requirements:
Be composed of high strength steel with minimum yield strength of 50,000 psi.
Have a standard "T" section with a nominal face width of 1.38-inches and nominal "T" length of 1.48-inches.
Weigh 1.25 pounds per foot (± 8%).
Be painted with a water based baked enamel paint.

Attach fabric to metal posts with heavy-duty plastic ties.

INSTALLATION:
Excavate a trench 6-inches wide and 6-inches deep around the outside perimeter of the inlet unless the fabric is pneumatically installed.

Extend the filter fabric a minimum of 12-inches into the trench. Backfill the trench with soil or crushed stone and compact over the filter fabric unless the fabric is pneumatically installed.

Use steel posts with a minimum post length of 60-inches consisting of standard "T" sections with a weight of 1.25 pounds per foot (±8%). Install the filter fabric to a minimum height of 24-inches above grade. Space the steel posts around the perimeter of the inlet a maximum of 3-feet apart and drive them into the ground a minimum of 24-inches. Cut the filter fabric from a continuous roll to the length of the protected area to avoid the use of joints. When joints are necessary, wrap filter fabric together only at a support post with both ends securely fastened to the post, with a minimum 6-inch overlap.

Attach fabric to steel posts with heavy-duty plastic ties.

Attach at least four (4) evenly spaced ties in a manner to prevent sagging or tearing of the fabric. In all cases, affix ties in no less than four (4) places.

INSPECTION AND MAINTENANCE:
Inspections should be made every 7 calendar days and within 24-hours after each storm that produces ¼-inches or more of rainIf the fabric becomes clogged, it should be replaced.
Sediment should be removed when it reaches approximately 1/3 the height of the fence. Take care not to damage or undercut fabric when removing sedimentIf a sump is used, sediment should be removed when it fills approximately 1/3 the depth of the holeMaintain the pool area, always providing adequate sediment storage volume for the next storm.

Storm drain inlet protection structures should be removed only after the disturbed areas are permanently stabilized. Remove all construction material and sediment, and dispose of them properly.
Grade the disturbed area to the elevation of the drop inlet structure crest. Use appropriate permanent stabilization methods to stabilize bare areas around the inlet.

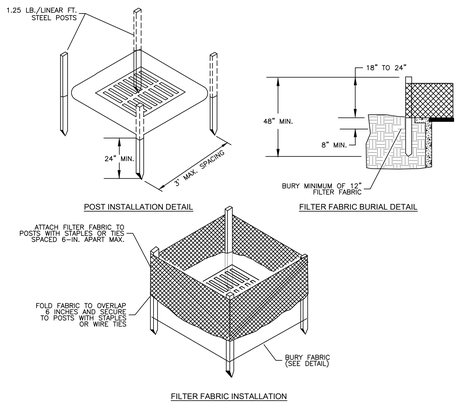

FILTER FABRIC INLET PROTECTION - TYPE A
NOT TO SCALE

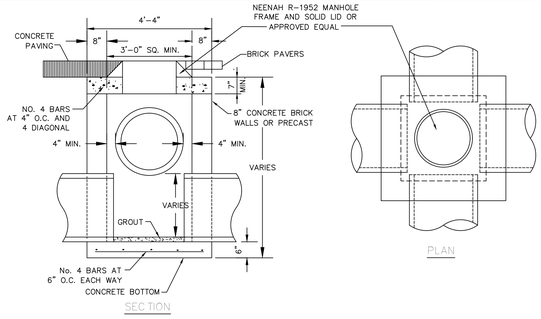

NOTES:
1. ALL CONCRETE SHALL BE 3,000 PSI.
2. ENDS OF ALL PIPES SHALL BE FLUSH WITH INSIDE WALL.
3. ALL STEEL BARS SHALL BE PLACED 1-1/2" CLEAR FROM BOTTOM AND SIDES OF SLAB.
4. FOR PIPES UP TO 24" I.D. USE 3'-0" x 3'-0" BOX.
5. FOR PIPES OVER 24" I.D. BOX INSIDE DIMENSIONS SHALL BE PIPE O.D. + 6" EACH SIDE OF PIPE.
6. ALL STEPS SHALL PROTRUDE 4" FROM THE INSIDE FACE OF STRUCTURE WALL.
7. CONCRETE BRICK WALLS SHALL HAVE A 1/4" MORTAR COAT ON INSIDE SURFACE.
8. WALL THICKNESS IS TO BE 12" IF BOX DEPTH EXCEEDS 12'-0".
9. ALL MATERIALS AND CONSTRUCTION ARE TO COMPLY WITH SCDOT STANDARD SPECIFICATIONS
10. EXISTING PIPE TO BE TIED TO JUNCTION BOX SHALL BE GROUTED IN THE WALL WITH NOT=SHRINK GROUT.
11. REINFORCED CONCRETE MAY BE SUBSTITUTED FOR BRICK WALLS. REINFORCING TO BE #4 BARS @ 12" E.W.

JUNCTION BOX DETAIL
NOT TO SCALE

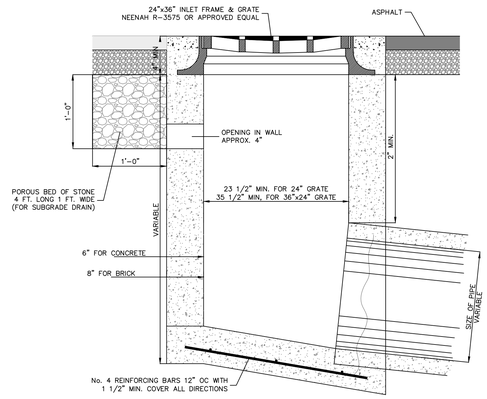

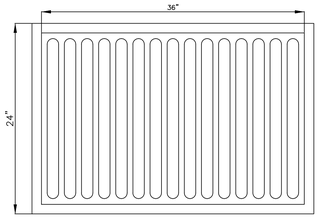

NOTES:
1. FOR CONSTRUCTION OF THE DROP INLET WALLS EITHER BRICK MASONRY OR CLASS 3000 CONCRETE MAY BE USED. FOR CONCRETE THE WALLS ARE TO BE 6 " THICK WITH A REINFORCING STEEL AREA OF 0.20 SQ. INCH PER FT. FOR BRICK THE WALLS ARE TO BE 8" THICK.
2. THE BOTTOM SLAB OF THE BOX SHALL BE A MINIMUM OF 6 INCHES THICK CLASS 3000 CONCRETE WITH A REINFORCING STEEL AREA OF 0.20 SQ. INCH PER FT. WIRE MESH MAY BE USED IN LIEU OF STEEL BARS PROVIDED A MINIMUM OF 0.20 SQ. IN. PER FT. IS MET.
3. MORTAR SHALL BE TYPE S OR M.
4. IF DESIRED THESE ITEMS MAY BE PRECAST PRIOR TO INSTALLATION IN LIEU OF BEING CAST IN PLACE. THE USE OF PRECAST UNITS WILL NOT RELIEVE THE CONTRACTOR OF THE RESPONSIBILITY OF OBTAINING SATISFACTORY INSTALLATIONS. SEE STANDARD DRAWINGS FOR PRECAST CONCRETE DRAINAGE BOX FOR ADDITIONAL DETAILS AND SPECIFICATIONS.
5. REINFORCING STEEL SHALL BE DEFORMED AND SHALL CONFORM TO AASHTO M 31, GRADE. 60. WIRE MESH SHALL CONFORM TO AASHTO M 55 AND M 221.
6. IF STRUCTURE DEPTH EXCEEDS 4'-6", METAL STEPS ARE TO BE PLACED ON WALL. SEE STEP STANDARD DRAWING 719-16.
7. CASTING SHALL CONFORM TO AASHTO M 105, CLASS 35B AND THE ALTERNATE LOAD TEST OF AASHTO M 306. CASTING SHALL ALSO MEET THE LOADING REQUIREMENTS OF FEDERAL SPECIFICATION RR-F-621 (LATEST EDITION).
8. A. STEEL GRATES AND FRAMES MAY BE USED IN LIEU OF CAST IRON AS LONG AS THE LOADING AND HYDRAULIC REQUIREMENTS ARE MET, AND ARE ON THE DEPARTMENT'S LIST OF APPROVED SUPPLIERS.
   B. STEEL GRATES SHALL BE HOT DIP GALVANIZED IN ACCORDANCE WITH AASHTO M 111.
   C. STEEL GRATES AND FRAMES SHALL BE DIMENSIONED TO BE INTERCHANGEABLE WITH EACH PIECE OF THE CAST IRON GRATE AND FRAME SHOWN. MUST HAVE A POSITIVE MEANS TO RETAIN THE GRATE IN THE FRAME.
   D. STRENGTH REQUIREMENTS OF STEEL GRATES AND FRAMES MUST MEET FEDERAL SPECIFICATION RR-F-621 (LATEST EDITION).
   E. MANUFACTURES DESIRING TO BE PLACED ON THE DEPARTMENT;S APPROVAL SHEET SHOULD CONTACT THE RESEARCH AND MATERIALS ENGINEER FOR PROCEDURES.
9. THE LONGEST DIMENSIONS OF THE OPENING IN THE IRON GATES SHOULD BE ORIENTED IN THE DIRECTION OF FLOW IF PRACTICAL.
10. AS SHOWN BY THIS DRAWING THE FRAME IS SET LEVEL, BUT THE ENGINEER MAY SET SAME ON SLOPE AS REQUIRED BY LOCAL DRAINAGE CONDITIONS.
11. AFTER THE FRAME IS SET IN ITS FINAL POSITION, IT IS TO BE ENCASED WITH CONCRETE AS SHOWN BY DRAWING.
12. THE FLOOR OF THE BASIN MUST SLOPE IN THE DIRECTION OF THE OUTLET PIPE AS SHOWN AND THE INSIDE OF THE OUTLET PIPE SHALL BE FLUSH WITH FLOOR OF BASIN.
13. THE SOFFIT (INSIDE TOP OF PIPE) OF THE OUTLET PIPE SHOULD BE NO HIGHER THAT THE SOFFIT OF THE INLET PIPE, UNLESS OTHERWISE SHOWN ON PLANS.
14. THE CONTRACTOR UNIT PRICE FOR DROP INLETS SHALL INCLUDE THE COST OF FURNISHING ALL MATERIALS AND WORK INCIDENTAL TO THE CONSTRUCTION OF THE STRUCTURE COMPLETE IN PLACE AS SHOWN IN ACCORDANCE WITH THE SC DOT STANDARD SPECIFICATIONS FOR HIGHWAY CONSTRUCTION (LATEST EDITION).

24"X36" DROP INLET DETAIL
NOT TO SCALE

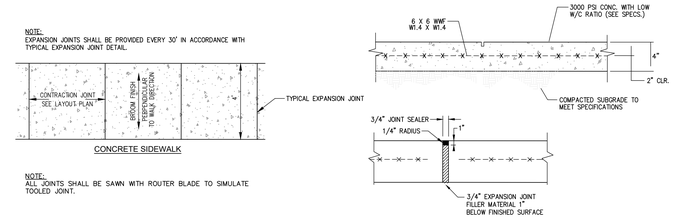

NOTE:
ALL JOINTS SHALL BE SAWN WITH ROUTER BLADE TO SIMULATE TOOLED JOINT.

NOTES:
1. CONCRETE SCORING 5' O.C. AND EXPANSION JOINTS AT 30' O.C.
2. SIDEWALK CROSS SLOPE BE NO STEEPER THAN 1:48 AND SHALL MEET 2010 ADA STANDARDS FOR ACCESSIBLE DESIGN (SECTION 403.3).
3. AREA FOR SIDEWALK TO BE PREPARED (I.E. GRADED) DURING ROADWAY CONSTRUCTION. INSTALLATION OF SIDEWALK BY BUILDER OF EACH INDIVIDUAL LOT. BUILDER TO ENSURE THAT SIDEWALKS LINE UP WITH EACH LOT BOTH HORIZONTALLY AND VERTICALLY AT LOT LINES.
4. SIDEWALK TO SLOPE DOWN TO MATCH BOTTOM OF DITCH AT EACH ROADWAY PIPE CROSSING. CONTRACTOR TO ENSURE THAT SIDEWALK TO MAINTAIN ADA ACCESSIBILITY.
5. AN 8" DIP PIPE TO BE INSTALLED AT ALL LOCATIONS WHERE SIDEWALK CROSSES ROADSIDE SWALES (I.E. AT INTERSECTIONS).

SIDEWALK DETAIL
NOT TO SCALE

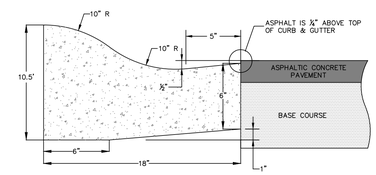

18" ROLLED CONCRETE CURB & GUTTER
NOT TO SCALE

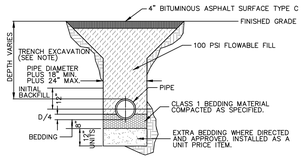

ASPHALT PATCH FOR PIPE CROSSING
NOT TO SCALE

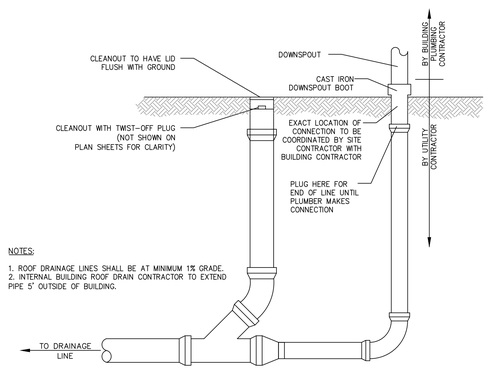

NOTES:
1. ROOF DRAINAGE LINES SHALL BE AT MINIMUM 1% GRADE.
2. INTERNAL BUILDING ROOF DRAIN CONTRACTOR TO EXTEND PIPE 5' OUTSIDE OF BUILDING.

TYPICAL ROOF DRAIN DETAIL
NOT TO SCALE

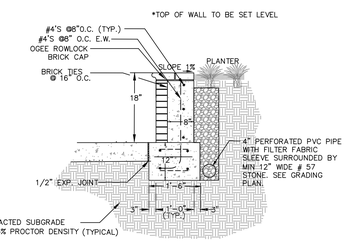

NOTES:
1. BRICK COLOR TO MATCH EXISTING BRICK ON BUILDING AS MUCH AS PRACTICAL. CONTRACTOR TO SUBMIT SAMPLES DURING SHOP DRAWING REVIEW PROCESS.

RAISED PLANTER RETAINING WALL SECTION
NOT TO SCALE

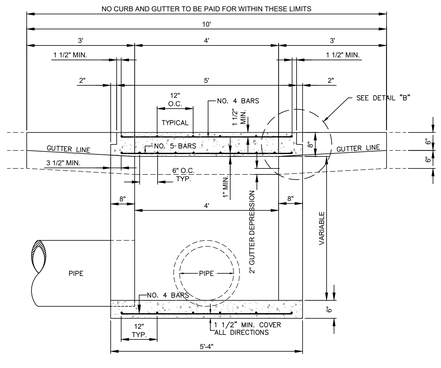

FRONT VIEW

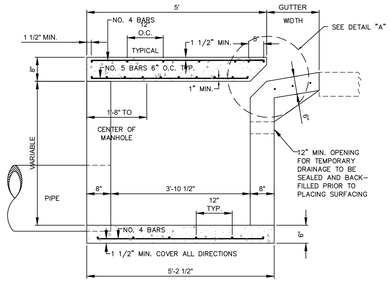

END VIEW

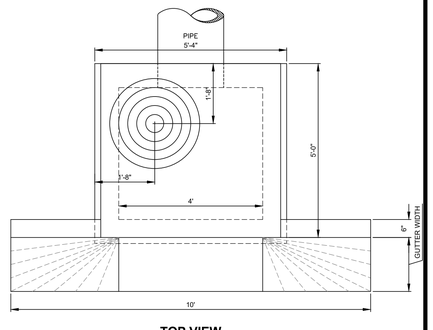

TOP VIEW

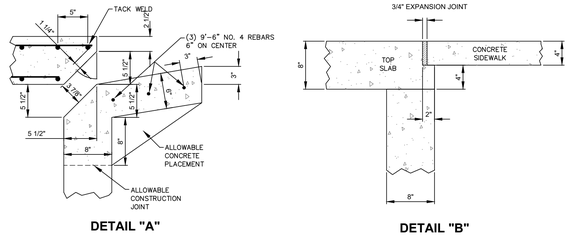

DETAIL "A"

DETAIL "B"

NOTES:

1. FOR CONSTRUCTION OF THE CATCH BASIN WALLS EITHER BRICK MASONRY OR CLASS A CONCRETE MAY BE USED FOR CONCRETE THE WALLS ARE TO BE 6 IN. THICK WITH A REINFORCING STEEL AREA OF 0.20 SQ. IN. PER FT. FOR BRICK THE WALLS ARE TO BE 8 IN. THICK. THE INTERIOR DIMENTIONS ARE TO REMAIN AS SHOWN FOR EITHER TYPE CONSTRUCTION.

2. THE BOTTOM SLAB OF THE BOX SHALL BE A MINIMUM OF 6 IN. THICK CLASS A CONCRETE WITH A REINFORCING STEEL AREA OF 0.20 SQ. IN. PER FT. WIRE MESH MAY BE USED IN LIEU OF STEEL BARS PROVIDED A MINIMUM OF 0.20 SQ. IN. PER FT. IS MET.

3. FOR CONSTRUCTION OF THE CATCH BASIN LID CLASS AA OR BETTER CONCRETE SHALL BE USED WITH REINFORCING STEEL AS SHOWN.

4. MORTAR SHALL BE TYPE S OR M.

5. IF DESIRED THESE ITEMS MAY BE PRECAST PRIOR TO INSTALLATION IN LIEU OF BEING CAST IN PLACE. THE USE OF PRECAST UNITS WILL NOT RELIEVE THE CONTRACTOR OF THE RESPONSIBILITY OF OBTAINING SATISFACTORY INSTALLATIONS. SEE STANDARD DRAWINGS FOR PRECAST STRUCTURES FOR ADDITIONAL DETAILS AND SPECIFICATIONS.

6. REINFORCING STEEL SHALL BE DEFORMED AND SHALL CONFORM TO AASHTO M 31, GRADE 60. WIRE MESH SHALL CONFORM TO ASSHTO M 55 AND M 221.

7. IF STRUCTURE DEPTH EXCEEDS 4'-6", METAL STEPS ARE TO BE PLACED ON WALL. SEE SCDOT STEP STANDARD DRAWING 719-16.

8. WHEN IT IS NECESSARY TO PLACE A CATCH BASIN IN A RADIUS, THE FACE OF THE CATCH BASIN TOP SHALL CONFORM TO THE HORIZONTAL CURVATURE OF THE ADJACENT CURB WHEN THE RADIUS IS 100 FEET OR LESS. OTHERWISE, THE TOP SHALL BE RECTANGULAR WITH SQUARE CORNERS. IN ALL CASES, THE BACK OF THE CATCH BASIN SHOULD FOLLOW THE SAME ALIGNMENT AS ITS FACE.

9. SEE SCDOT STANDARD DRAWING 719-7 FOR DETAIL OF MANHOLE CASTING AND COVER.

10. LIFT HOLES MAY BE PLACED AS NECESSARY. ALL LIFT HOLES IN THE LID SHALL BE GROUTED SHUT PRIOR TO COMPLETION OF THE INSTALLATION.

11. THE CONTRACT UNIT PRICE FOR CATCH BASINS SHALL INCLUDE THE COST OF FURNISHING ALL MATERIALS AND WORK INCIDENTAL TO THE CONSTRUCTION OF THE STRUCTURE COMPLETE IN PLACE AS SHOWN, INCLUDING THE CURB AND GUTTER, IN ACCORDANCE WITH THE STANDARD SPECIFICATIONS.

SCDOT TYPE 16 CATCH BASIN
NOT TO SCALE

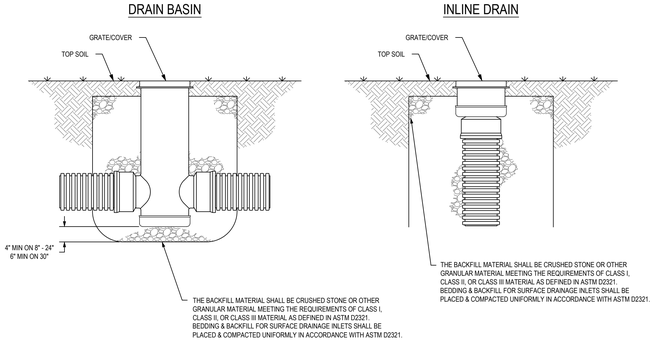

NYLOPLAST (OR APPROVED EQUAL) DRAIN BASIN FOR NON TRAFFIC INSTALLATION DETAIL
NOT TO SCALE

GMK ASSOCIATES, INC.
Design/Planning/Construction
1201 Main Street, Suite 2100
Columbia, S.C. 29201
tel. 803-256-0000
fax 803-255-7243

ALL RIGHTS RESERVED. THIS DRAWING AND THE DESIGN SHOWN THEREON ARE COPYRIGHTED AS PRESCRIBED BY THE LAWS OF THE UNITED STATES AND ARE THE PROPERTY OF GMK ASSOCIATES ARCHITECTURAL DIVISION. ANYONE DUPLICATING, REPRODUCING OR CAUSING TO BE REPRODUCED THE WHOLE OR PART OF THESE DRAWINGS OR THE DESIGN THEREON WITHOUT PERMISSION OF THE ARCHITECT WILL BE SUBJECT TO LEGAL ACTION.

consultants

THE LANDPLAN GROUP SOUTH
LANDSCAPE ARCHITECTURE • ENGINEERING • PLANNING
1206 SCOTT STREET
COLUMBIA, SC 29201
803.256.0562
WWW.LANDPLANSOUTH.COM

client

admin
THE SOUTH CAROLINA DEPARTMENT of ADMINISTRATION

THE SOUTH CAROLINA DEPARTMENT OF ADMINISTRATION
State Project #D50-6037-PD

project name

COLUMBIA MILLS ROOF REPLACEMENT & ATRIUM ROOF/ WINDOW REPLACMENT

A/E project number

20058.01

seals/signature

issued for

CONSTRUCTION DOCUMENTS

date

APRIL 14, 2022

number	*item*	*date*

key plan

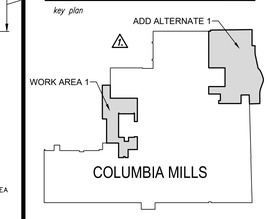

sheet title

SITE DETAILS

sheet number

C5.0

drawn by: CJK
checked by: HCB

TLPGS JOB No. 1060